N° DESIGN
20-240

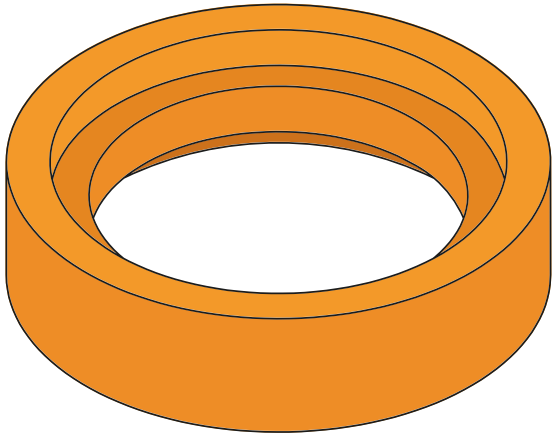

Section A-A

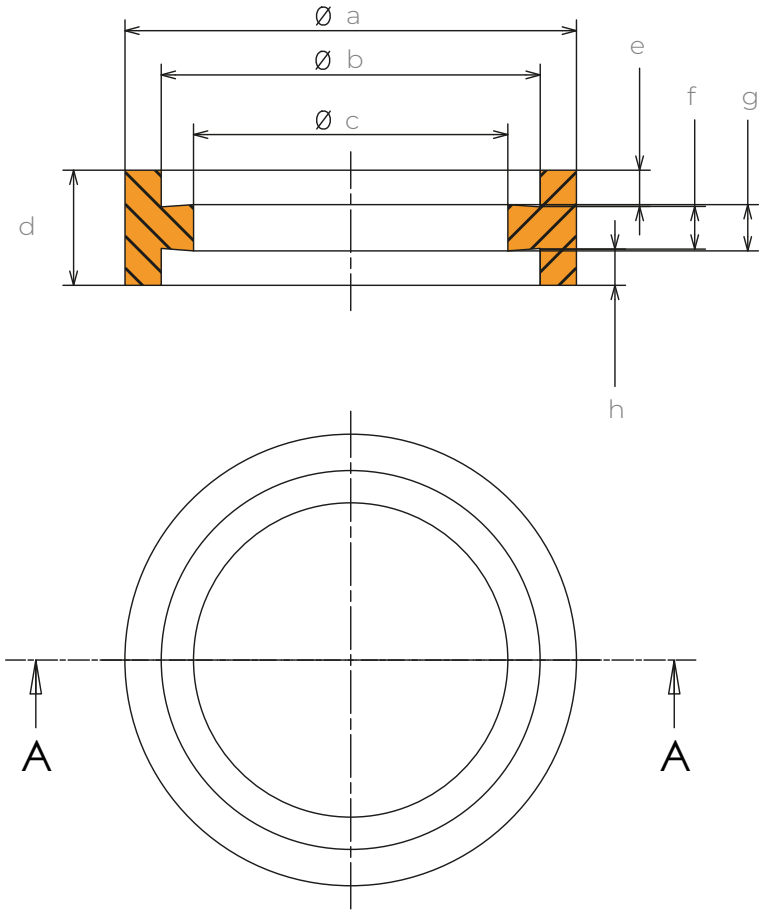

FEETS ON MACHINE	
ORIGINAL CODE	MACHINE
ORIGINAL CODE	MACHINE
ORIGINAL CODE	MACHINE
ORIGINAL CODE	MACHINE
ORIGINAL CODE	MACHINE
ORIGINAL CODE	MACHINE
ORIGINAL CODE	MACHINE
ORIGINAL CODE	MACHINE
ORIGINAL CODE	MACHINE
ORIGINAL CODE	MACHINE
ORIGINAL CODE	MACHINE
ORIGINAL CODE	MACHINE
ORIGINAL CODE	MACHINE

REV.	DATE	DESCRIPTION
0		
1		
2		
3		
4		

MEASUREMENTS	
a	
b	
c	
d	
e	

TITLE	N° DESIGN	MACHINE
No Crush Wheel - EX1	20-240	
DESIGNED BY	DATE	MATERIAL
AURORA		
REF. AURORA	SCALE	PROCESSING
	A4	

OBSERVATIONS

AURORA
THE NEW WHEELS BRAND
aurora-wheels.com

N° DESIGN
20-240

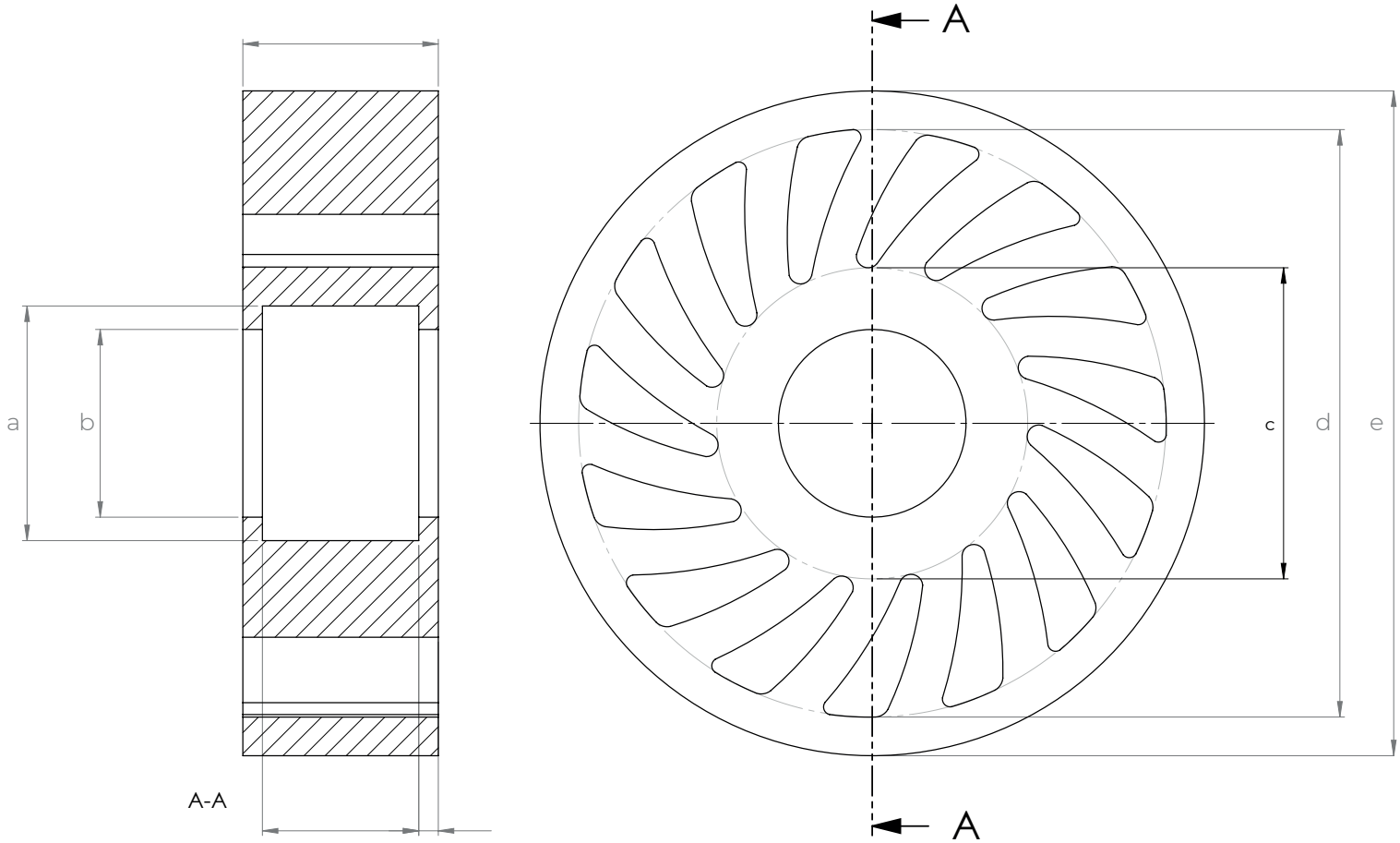

FEETS ON MACHINE	
ORIGINAL CODE	MACHINE
ORIGINAL CODE	MACHINE
ORIGINAL CODE	MACHINE
ORIGINAL CODE	MACHINE
ORIGINAL CODE	MACHINE
ORIGINAL CODE	MACHINE
ORIGINAL CODE	MACHINE
ORIGINAL CODE	MACHINE
ORIGINAL CODE	MACHINE
ORIGINAL CODE	MACHINE
ORIGINAL CODE	MACHINE
ORIGINAL CODE	MACHINE
ORIGINAL CODE	MACHINE

REV.	DATE	DESCRIPTION
0		
1		
2		
3		
4		

MEASUREMENTS	
a	
b	
c	
d	
e	

TITLE	N° DESIGN	MACHINE
No Crush Wheel - EX1	20-240	
DESIGNED BY	DATE	MATERIAL
AURORA		
REF. AURORA	SCALE	PROCESSING
	A3	

OBSERVATIONS

AURORA
THE NEW WHEELS BRAND
aurora-wheels.com